LTE-G-003L

LTE Antenna

DIMENSIONS

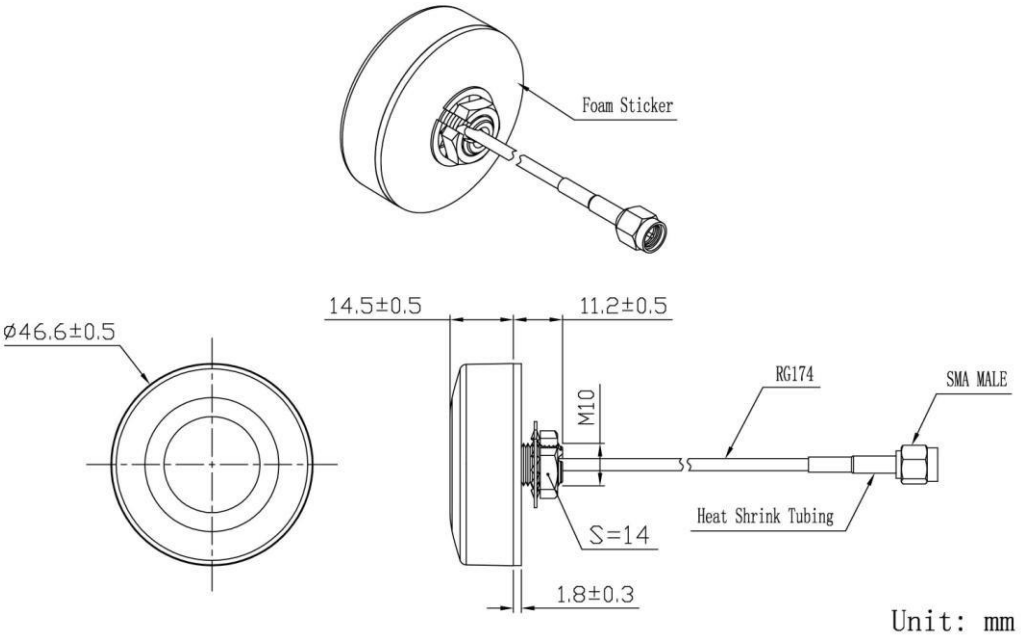

LTE-G-003L

LTE Antenna

SPECIFICATIONS

Item		Specifications
LTE Antenna	Frequency Range	698~960MHz/1710~2690MHz
	Polarization	Linear
	Gain	2.5dBi (Zenith)
	V.S.W.R	< 3.0
	Impedance	50Ω
Mechanical	Cable	RG174
	Connector	SMA/MCX/FAKRA or others
	Radome Material	ABS
	Mounting Method	Screw
Environmental	Operating Temperature	-40℃ ~+85℃
	Relative Humidity	Up to 95%
	Ingress Protection	IP65~IP67 (exclude cable outlet)
	Vibration	10 to 55Hz with 1.5mm amplitude 2hours
	Environmentally Friendly	ROHS Compliant
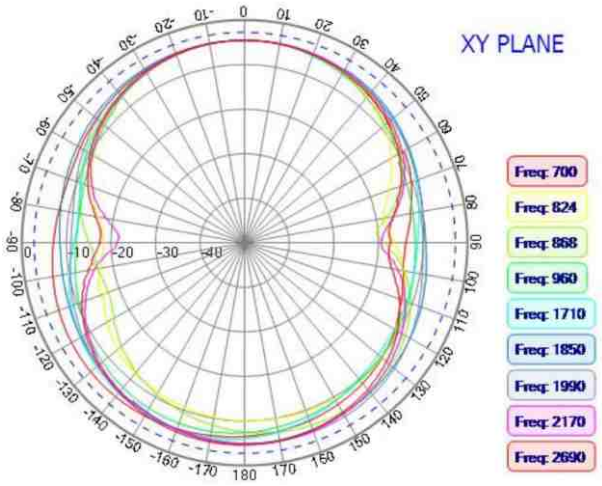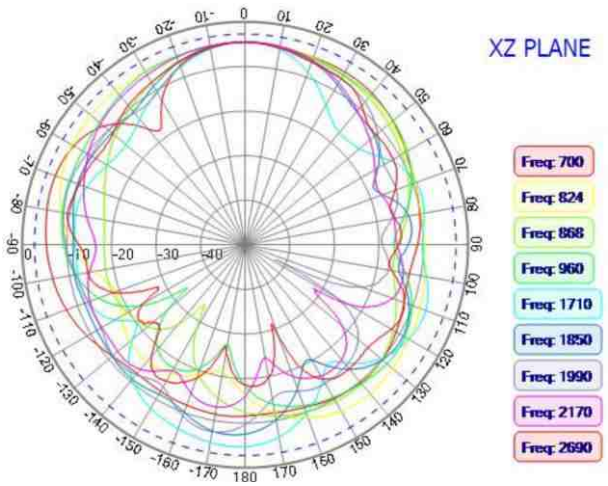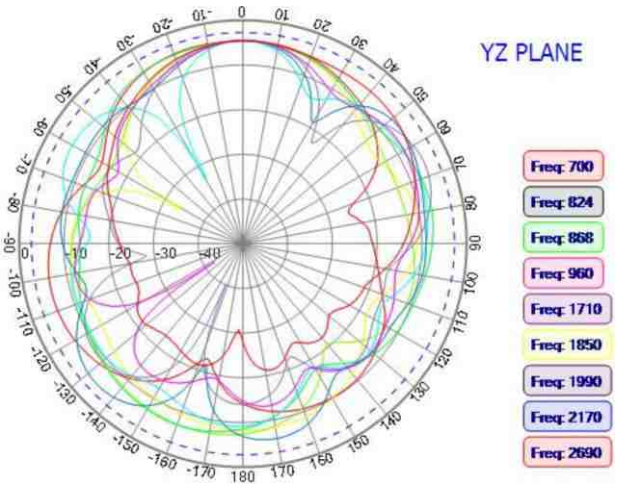
Radiation Pattern